SYNERGEE
KETTLEBELL RACK

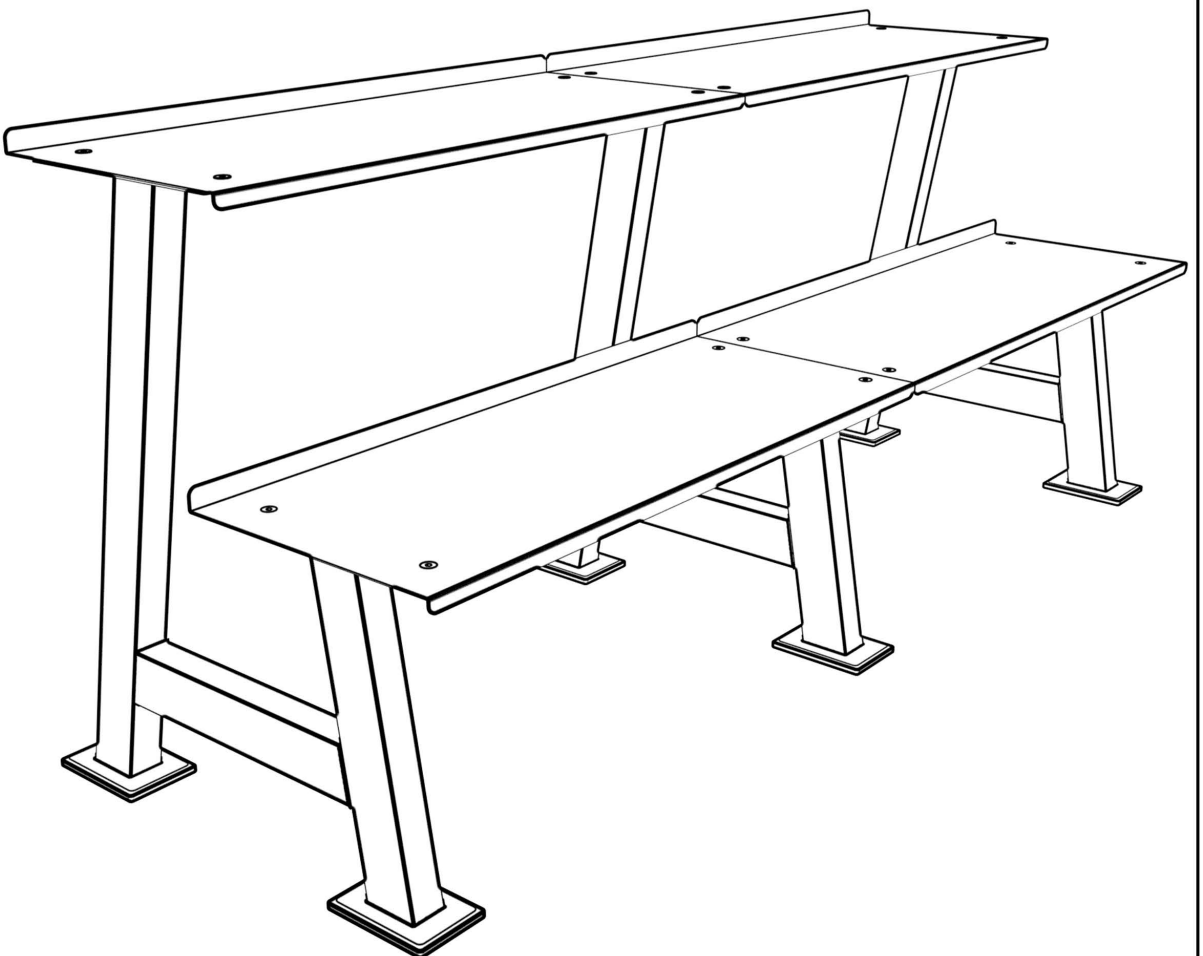

No.	Description	Qty
1	Footing	6
2	Support Leg	3
3	Kettlebell Shelf	4
4	M10 Hex Socket Flat Head Cap Screw	16
5	Washers (10mm Diameter)	16
6	Nuts (10mm Diameter)	16

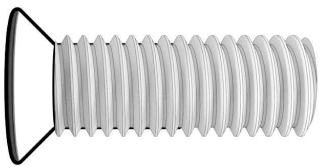

M10*20 (16pcs)

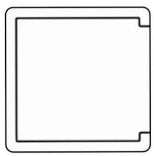

Footing (6pcs)

Kettlebell Shelf (4pcs)

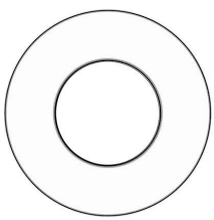

M10 Washer (16pcs)

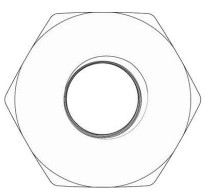

10 Washer (16pcs)

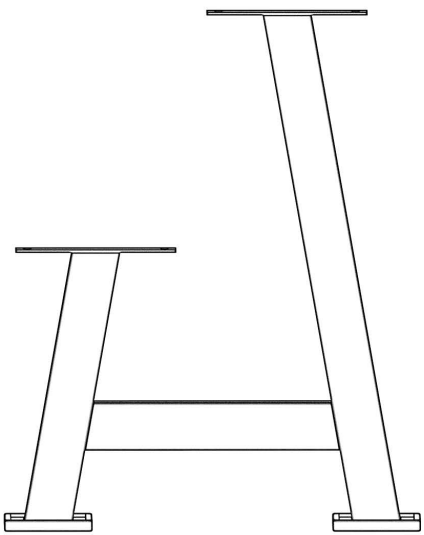

Support Leg (3pcs)

HARDWARE INCLUDED	Flat Wrench	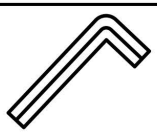 Allen Key

IF ANY PIECES ARE MISSING, PLEASE CONTACT US IMMEDIATELY:
HELLO@SYNERGEEFITNESS.COM OR 1.855.217.7136

1.

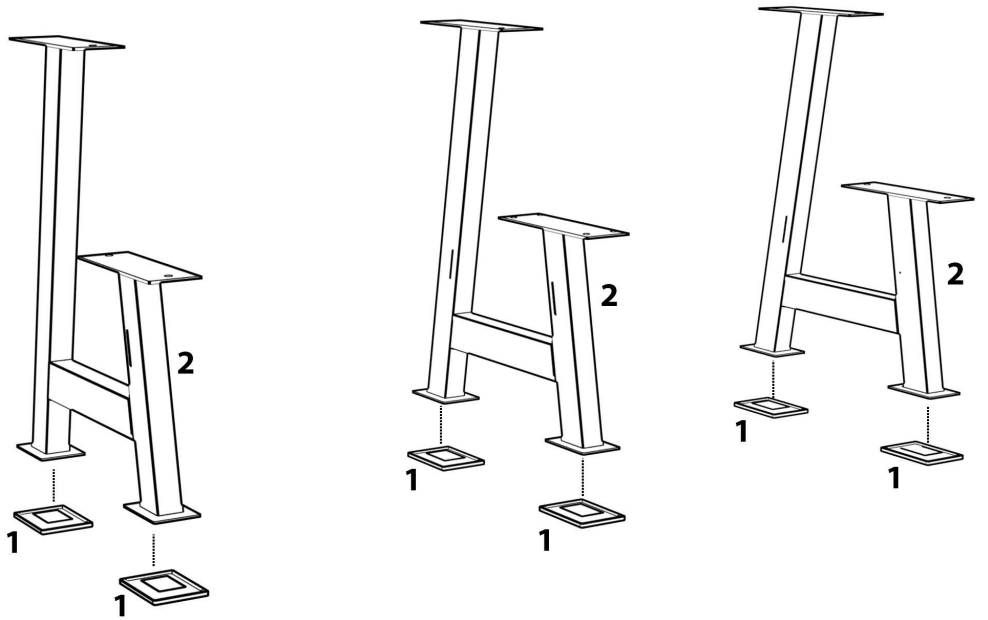

Line up footing in a parelell line
Gently place the support legs on top of the footing

2.

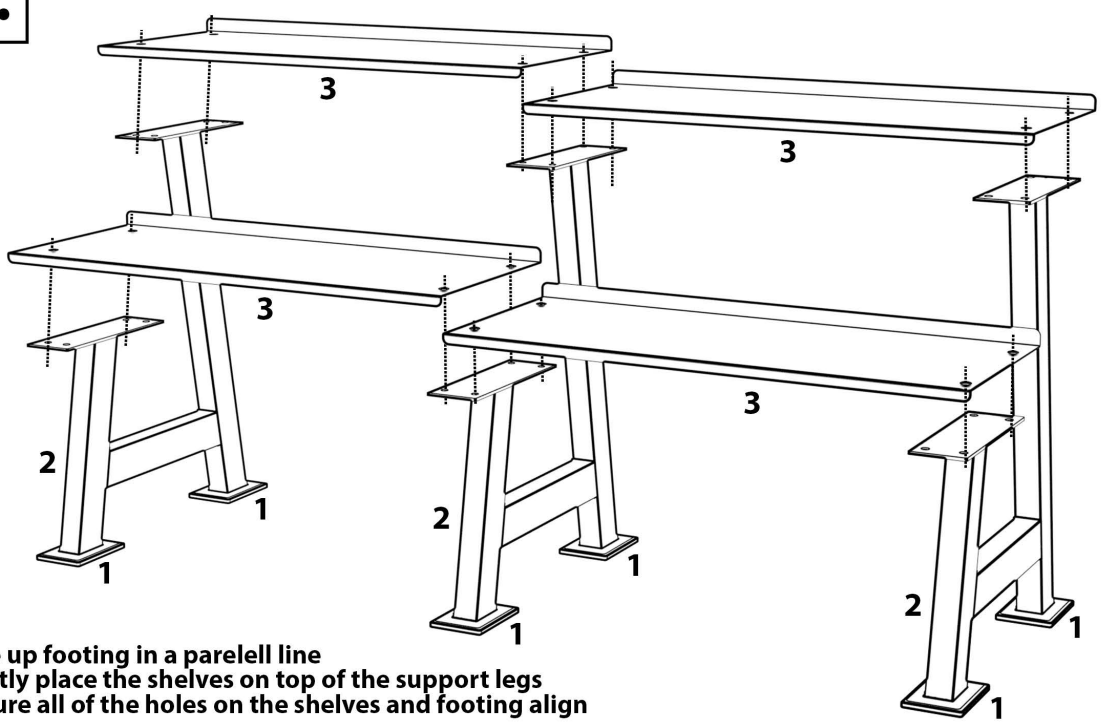

Line up footing in a parelell line
Gently place the shelves on top of the support legs
Ensure all of the holes on the shelves and footing align

3.

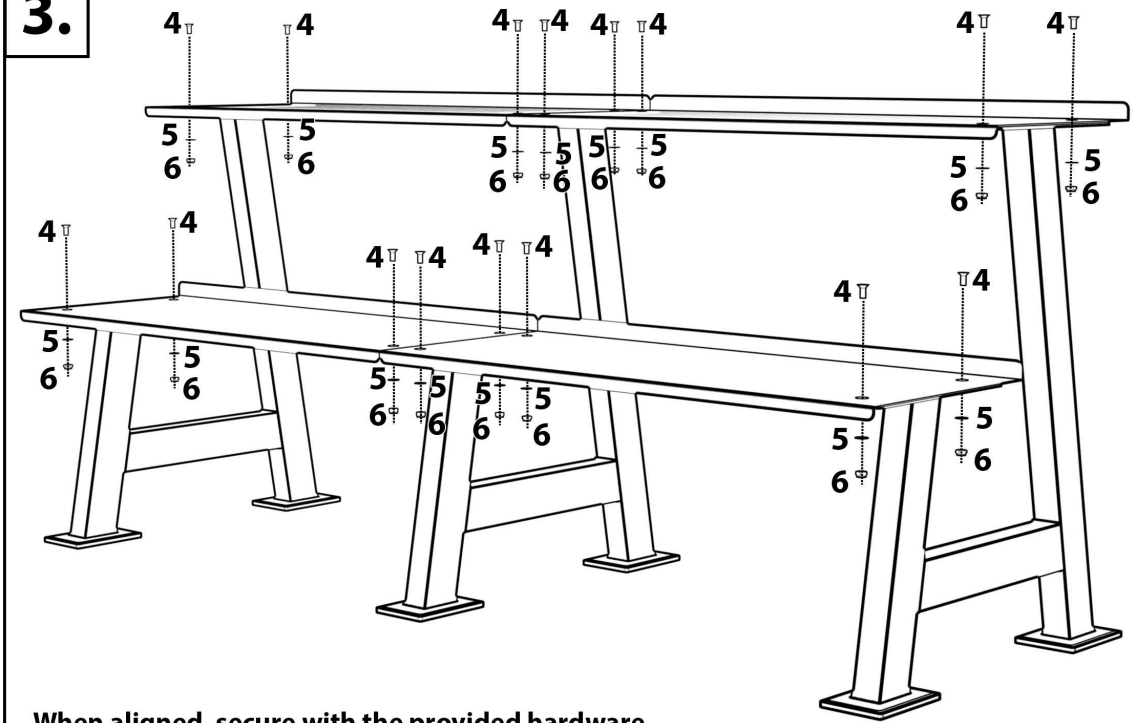

When aligned, secure with the provided hardware
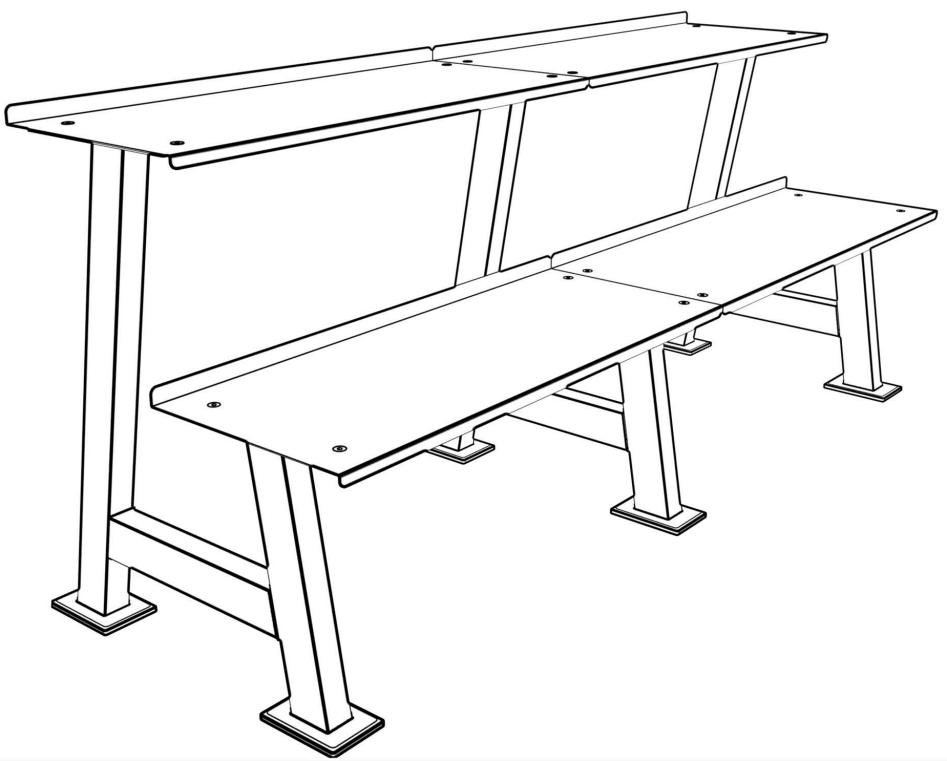
4.